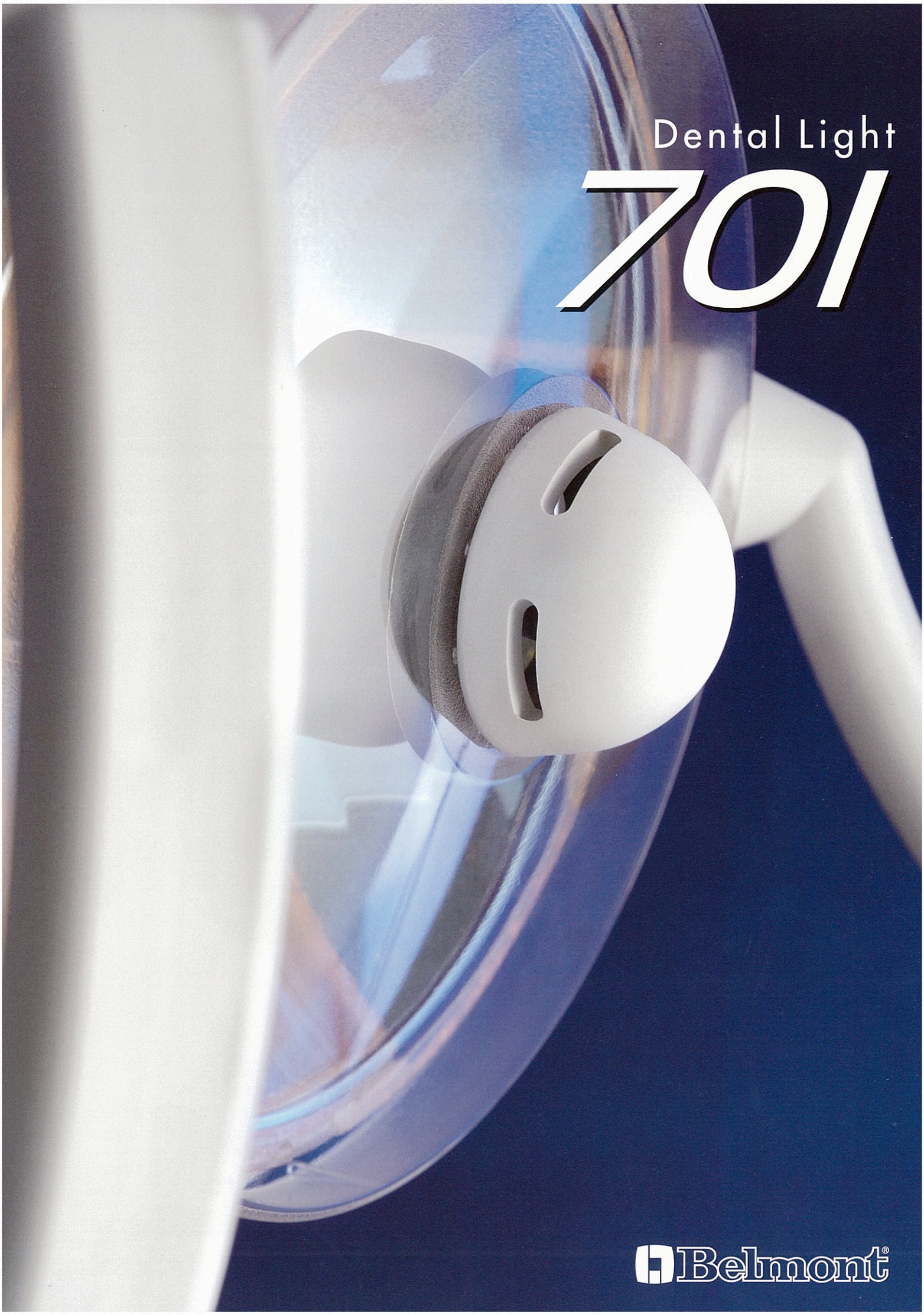

Dental Light 701

Belmont®

Designing a new dental light with good optical capability, maneuverability and design with reasonable cost is the basic concept behind 701

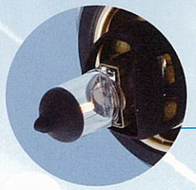

Easy to replace new halogen lamp

The three-position controller enables the selection of composite safety mode to prevent premature curing and two intensity modes, low and high for proper oral cavity illumination

Comfort grip handles facilitate preferred positioning

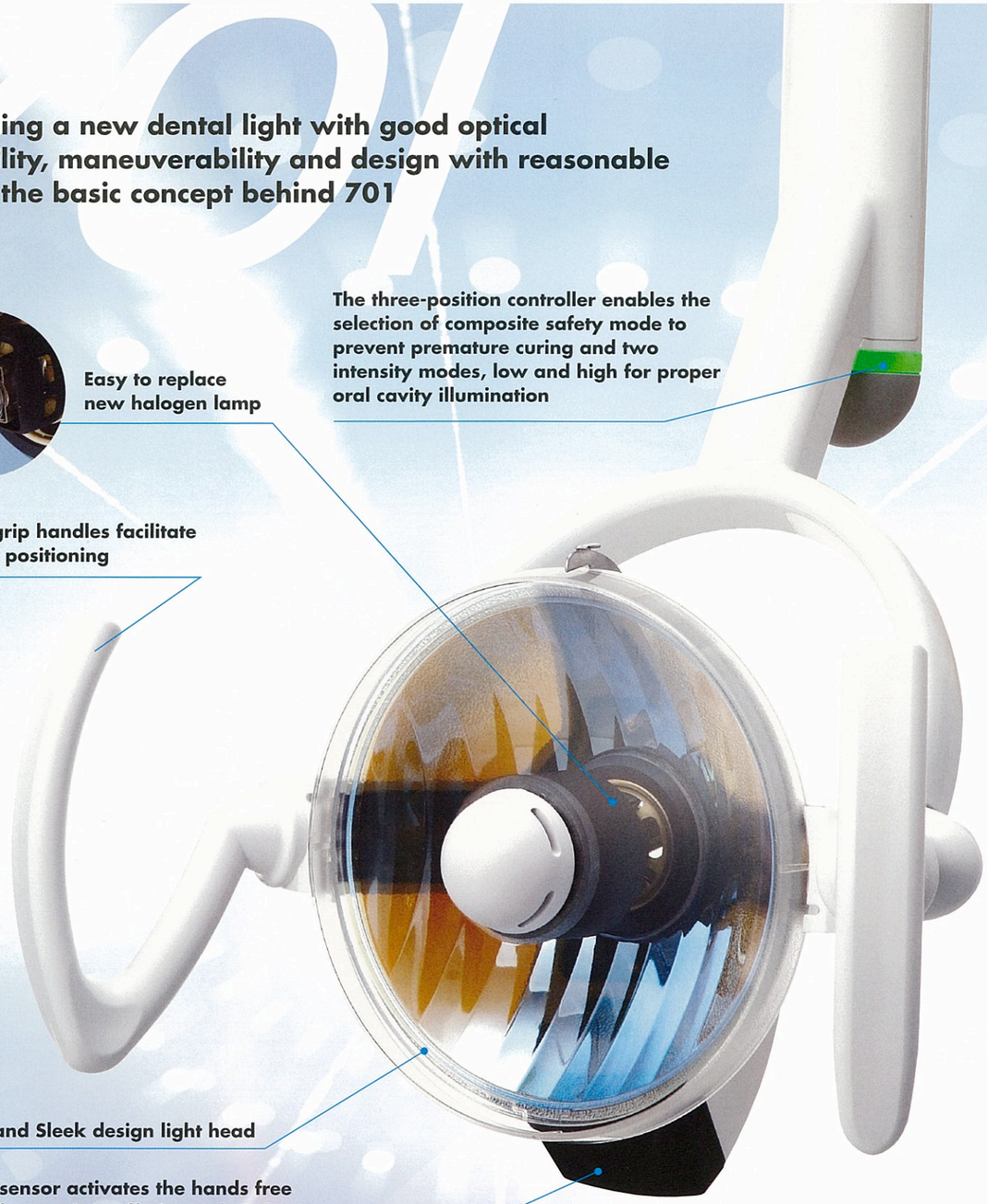

Compact and Sleek design light head

Touchless sensor activates the hands free on and off operation, offering reduced risk of cross contamination

Options

Detachable Handles

Autoclavable and easy to remove.

Mirror

Adjustable angle of the patient mirror to look inside mouth.

Manual Switch

Manual Switches for on-off and three-positions control, low/high and composites mode.

Unit Mount Light Model; 720S

The unit mount lights offer a great option for smaller surgeries.

Ceiling Mount Light Model; 702S

The ceiling mount lights offer a wider space for operating area.

Track Light Model; 705S

The track lights offer additional flexibility for larger surgeries.

Specifications

Light Pattern	220mm x 85mm at a focal distance of 650mm		
3-Position Intensity Switch	High Intensity	Low Intensity	Composite Mode
Light Output	28,000 lux	18,000 lux	8,000 lux
Color Temperature Range	4200˚K	4000˚K	3600˚K
Output Voltage	11.7V	10.2V	8.1V
Input Voltage	100/115/120V & 220/230/240V 50/60Hz AC		
Bulb Type	12V, 55 Watt Tungsten Halogen		

✻1 Spare Bulb included

705S Track Light

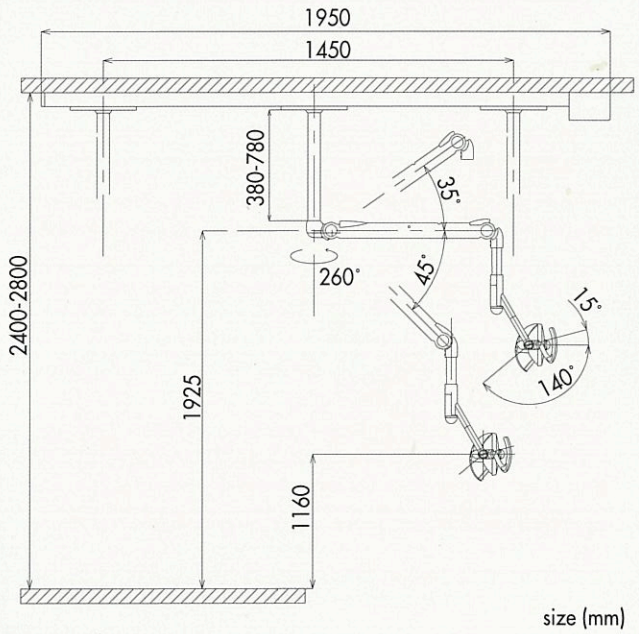

size (mm)

720S Unit Mount Light

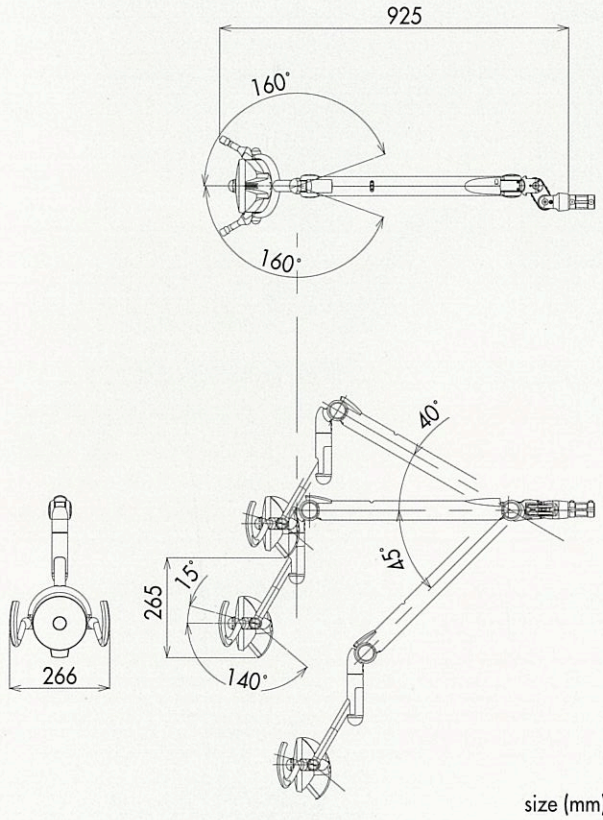

size (mm)

702S Ceiling Mount Light

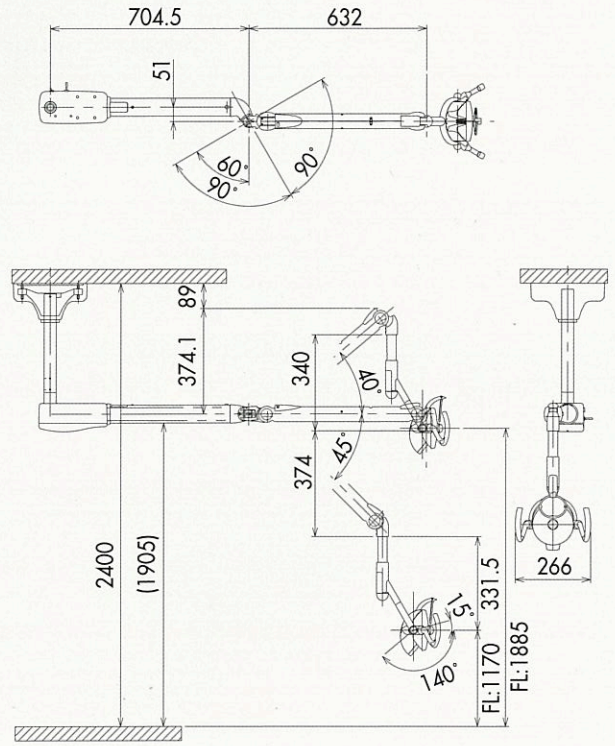

size (mm)

TAKARA BELMONT CORPORATION
1-1, 2-Chome, Higashi Shinsaibashi, Chuo-ku, Osaka, Japan 542-0083
Tel: +81 (0)6 6213 5945
Fax: +81 (0)6 6212 3680
E-mail: belmont7@belmont-corp.co.jp
www.takara-net.com

The manufacturers reserve the right to alter and improve the specification without notice.

Printed in Japan 2005/09/5000 OP